REVISIONS		
ISS	ZONE	DESCRIPTION\PER REQUEST\DATE

1. CRIMPED FERRULE
   HEX CRIMP SIZE .128"
2. CRIMPED CONTACT PIN
   HEX CRIMP SIZE .068"
3. MAX. PANEL THICKNESS=3.5mm

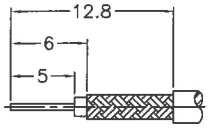

RECOMMENDED
CABLE STRIPPING DIM'S
(建議剝線尺寸)

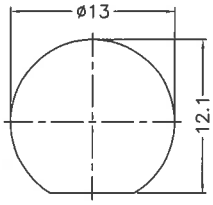

RECOMMENDED
MOUNTING HOLE
(建議架設孔)

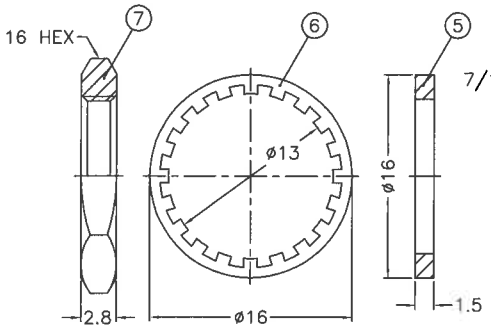

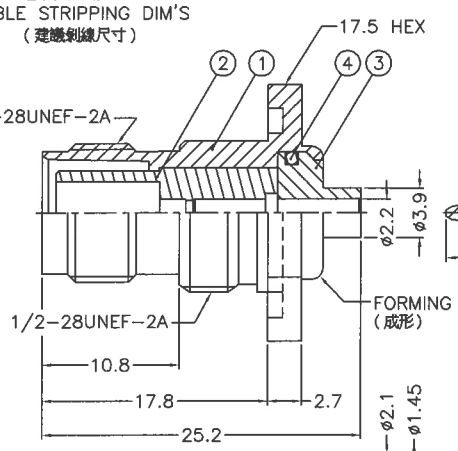

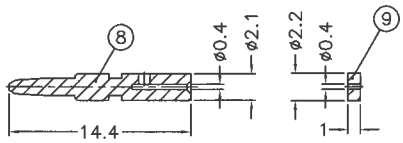

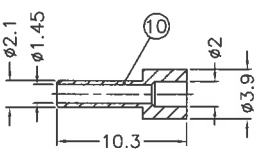

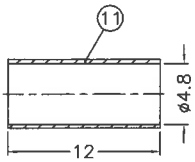

NOTES: FINISH (PLATING THICKNESS IN MICRO-INCHES)
1. BRASS
2. NICKEL PL. 100 MIN. THICK OVER COPPER PL. 50 MIN. THICK
3. GOLD PL. 3 MIN. THICK OVER NICKEL PL. 50 MIN. THICK OVER COPPER PL. 50 MIN. THICK
4. TEFLON

NO.	DESCRIPTION	MATERIAL	FINISH	Q'TY	DRAWING NO.
11	HEAT SHRINK	WITH GLUE	BLACK	1	ø4.8X12mmL
10	FERRULE	NOTE 1	NOTE 2	1	FR-20-39-103
9	INSULATOR	NOTE 4	NATURAL	1	900-1181A1-9T -0.4
8	CONTACT PIN	NOTE 1	NOTE 3	1	71628RP-6421A1 -7-0.4
7	HEX NUT	NOTE 1	NOTE 2	1	HN-16-1228-28
6	LOCK WASHER	NOTE 1	NOTE 2	1	LW-13-16-05
5	GASKET	RUBBER	RED	1	GS-122-160-15
4	GASKET	NBR	BLACK	1	GS-75-95-10
3	BARREL	NOTE 1	NOTE 2	1	71628RP-6421U1 -3-01
2	INSULATOR	NOTE 4	NATURAL	1	71628RP-6421A1 -2-50T
1	BODY	NOTE 1	NOTE 2	1	71628RP-6421A1 -1

DIMENSIONS ARE IN MILLIMETERS
UNLESS OTHERWISE SPECIFIED TOLERANCES
0.5-6 = ±0.2
6-30 = ±0.4
30-120 = ±0.6
120-315 = ±1
315-1000 = ±1.6
1000-2000 = ±2.4

SCALE 2.5/1 | ISSUE A

PART NO.

APPROVED	DATE 01-10-'12	TITLE TNC REVERSE POLARITY BULKHEAD CRIMP JACK (FOR RG-178, 196 CABLE)
CHECKED	DATE 01-10-'12	DRAWING NO. 71628RP-6421U1-01-50
DRAWN ANGELA	DATE 01-10-'12	FILE NO. R:\D\G\DWG\71628\RP\6421U1\01\50-1