Revisions

Note: Revisions B; B-1; B-2..... On behalf of official Drawing.
Revisions 1; 2; 3; 4..... On behalf of experiment's Drawing.

ISS	Symbol	Description	Date
B	B	CHE for New Drawing Frame & New PN System	2006/07/10

Outline Drawing

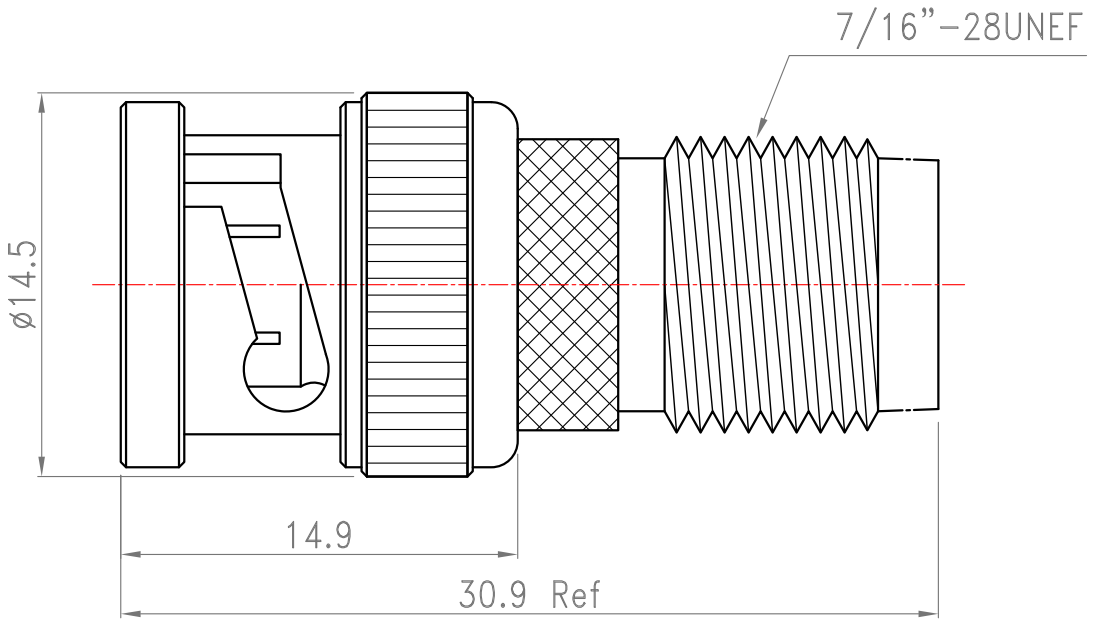

*"Change new drawing frame in Blue Color since 2009/07/01 to comply with Company CIS Policy."

RoHS COMPLIANCE

6				
5				
4	Pin	Brass	Gold	
3	Insulator	Delrin	None	

Scale	Abbr.	Date	Rev.
NTS	ST	2009/07/15	B

Tolerances :
.X ±0.2
.XX ±0.1
.XXX±0.05

All Dimensions in mm
(Unless Otherwise Specified)

Customer P/N:

DWG.NO. AT132W0N02/Z

TITLE. BNC Plug to TNC Jack Adapter