BNC plug 75 Ohm
right angled, crimp for RG59

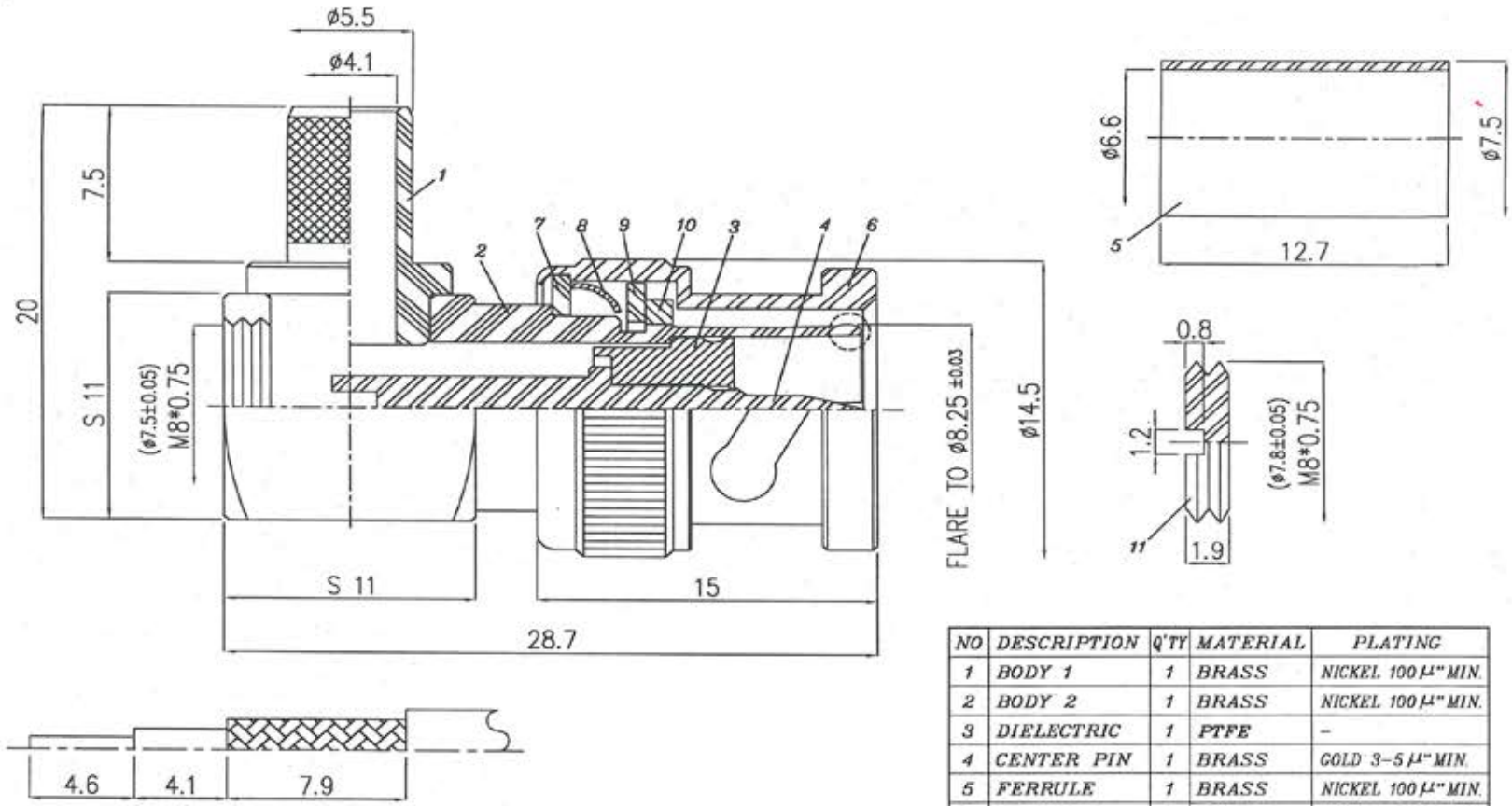

NO	DESCRIPTION	Q'TY	MATERIAL	PLATING
1	BODY 1	1	BRASS	NICKEL 100 µ" MIN.
2	BODY 2	1	BRASS	NICKEL 100 µ" MIN.
3	DIELECTRIC	1	PTFE	–
4	CENTER PIN	1	BRASS	GOLD 3–5 µ" MIN.
5	FERRULE	1	BRASS	NICKEL 100 µ" MIN.
6	SHELL	1	BRASS	NICKEL 100 µ" MIN.
7	WASHER	1	BRASS	NICKEL 100 µ" MIN.
8	WASHER	1	SAE HIGH CARBON STEEL	NICKEL 100 µ" MIN.
9	RETAINING RING	1	BRASS	NICKEL 100 µ" MIN.
10	GASKET	1	RUBBER	–
11	CIR NUT	1	BRASS	NICKEL 100 µ" MIN.

Unit in mm

Tolerances:

0–0.5mm ± 0.10mm	0.5–8mm ± 0.20mm
8–30mm ± 0.40mm	30–120mm ± 0.50mm

All material in accordance with RoHS + REACH!

Prep.:	Date:	Rev.	Date:	Remark:	Prep.:	Check.:	Item No.:	B13Cr75
J.A.	20.03.15							
Check.:	Date:						Customer Item No.: 7329C75	
							EAN Bar Code:	
Approv.:							All rights reserved	Page 1 of 1