Revisions

Note: Revisions B; B-1; B-2..... On behalf of official Drawing.
Revisions 1; 2; 3; 4..... On behalf of experiment's Drawing.

ISS	Symbol	Description	Date
B	B	CHE for New Drawing Frame & New PN System	2006/07/11
B-1	B-1	CHE for Dimension on Drawing, from 6.3 to 6 mm.	2010/04/06

Note :

1. All metal material is in compliance with RoHs Directive 2002/95/EC Annex 4 (1) Section 6 paragraph.

Outline Drawing

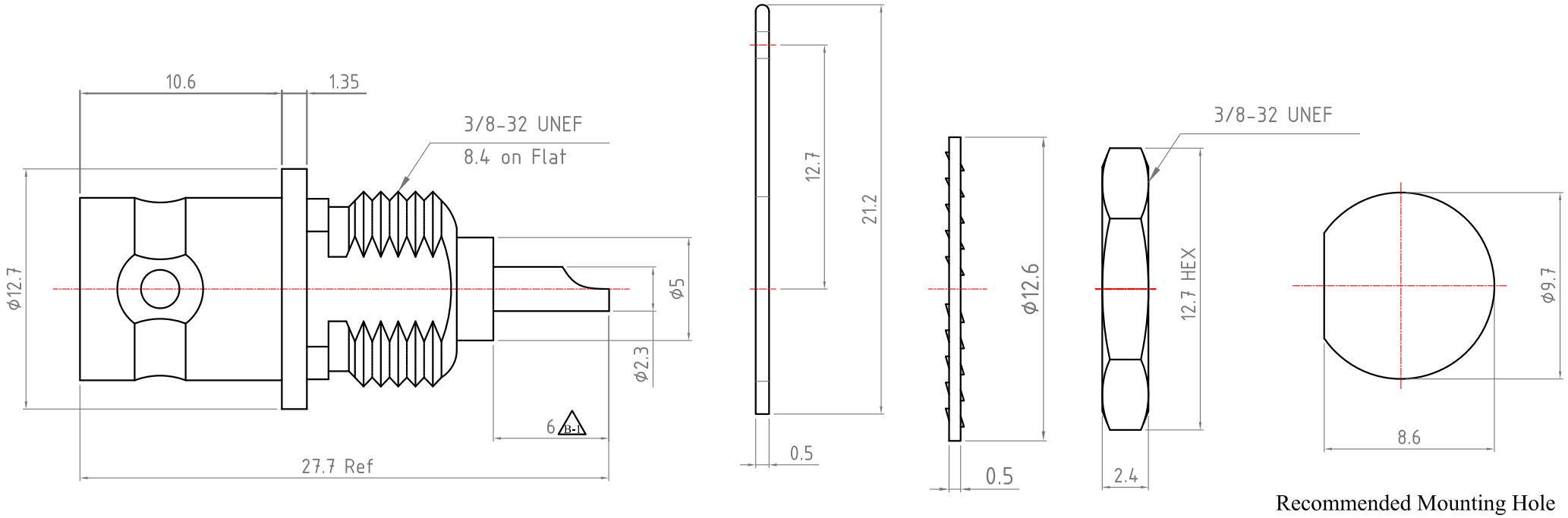

Recommended Mounting Hole

*Change new drawing frame in Blue Color since 2009/07/01 , to comply with Company CIS Policy.

RoHS COMPLIANCE

ITEM	Description	Material	Finish	Part Number	QTY
6	Nut	Steel	Nickel		
5	Washer	Steel	Nickel		
4	Grounding Tag	Steel	Nickel		
3	Pin	Brass	Gold		
2	Insulator	Delrin	None		
1	Body	Brass	Nickel		

Scale	Abbr.	Date	Rev.
NTS	ST	2012/07/16	B-1

Tolerances :
.X ±0.2
.XX ±0.1
.XXX±0.05

All Dimensions in mm (Unless Otherwise Specified)

Drawn	Checked	Approved
Mark 2012/07/16	Ryan 2012/07/16	G. Sun 2012/07/16

Proprietary Note
This document contains information proprietary to which is either copyrighted, or patent applied for, and / or protected by trade secret laws.
This document or parts thereof, may not be used, disclosed or reproduced in any form by any method, or for any purpose, without the written permission of Taiwan.

Customer P/N:

DWG. NO.
B222C0N02-3

TITLE
BNC Bulkhead Solder Jack